Approved for use in the Wildland Urban Interface (W.U.I.)

Revision Date: October 19, 2022

Chapter 7A compliant: Tested and listed to ASTM2886.
OSFM BML listing: 8165-2192, ICC-ESL listing: 1300

1 Hour Fire Rated, ICC-ESL listing: 1299. **Canadian Compliance** : ICC-ESL: 1455 [CAN/ULC-S101-14]

1299,1300,1455

WWW.VULCANVENTS.COM (916) 652-7424 info@vulcanvents.com P.O. Box 1126 Loomis, CA. 95650

Recommended Installation:
Use EverKem 814+ intumescent firestop caulking or similar, along flanges.
For application details and installation examples, please visit www.VulcanVents.com

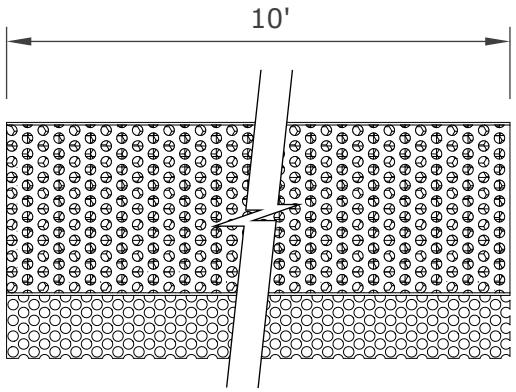

TOP VIEW

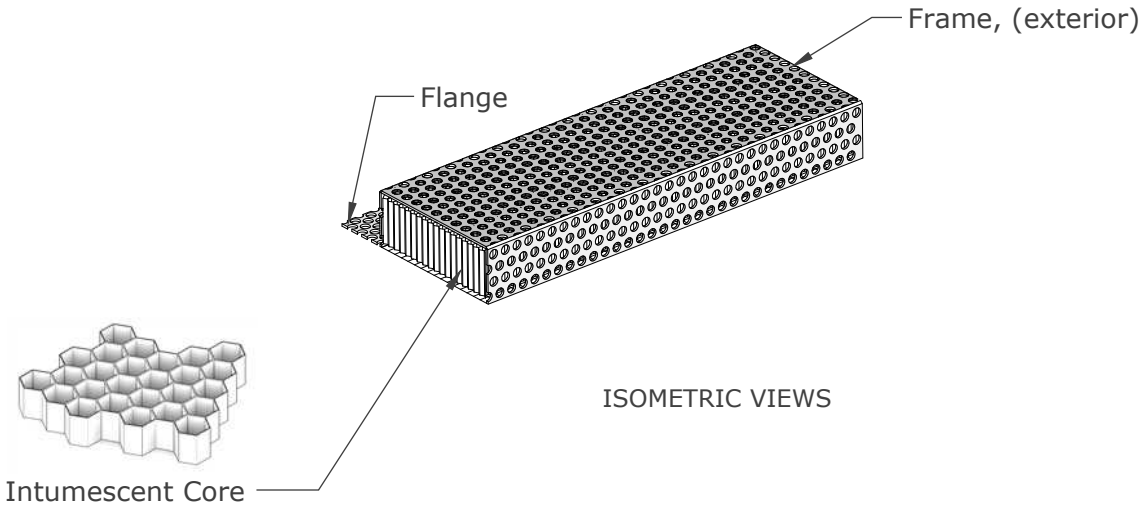

ISOMETRIC VIEWS

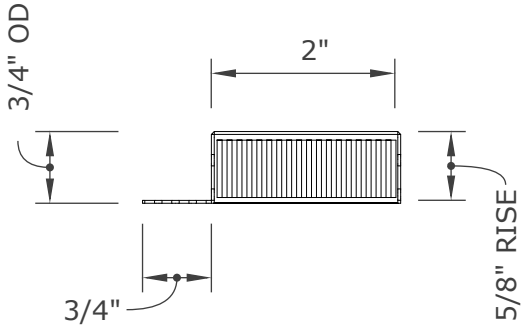

END VIEW

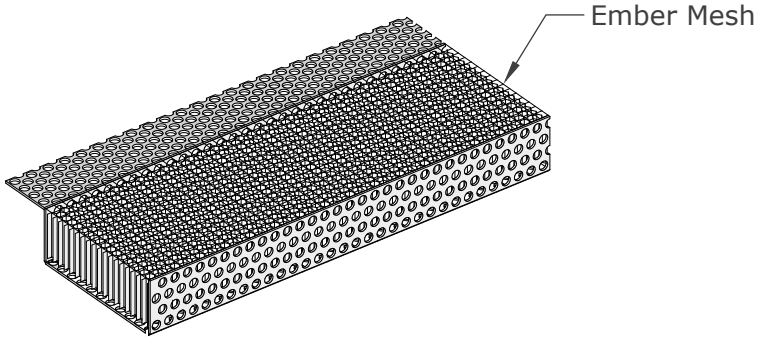

Proudly Manufactured By: NEW CAL METALS INC.
www.newcalmetals.com

VSC2120SL PRODUCT SPECIFICATION & DATA SHEET

Model Description	**Continuous Vent**	Flange Type	**Single-Leg**	Frame & Flange	**G90 Galvanized Perforated Steel** (1/8" holes) **- 24GA**
Model Number	**VSC2120SL**	NFVA	**96 sq. in.**	Intumescent Core	**5mm Hexagonal Matrix - Aluminum with intumescent coating**
Model Size	**2" x 120"**			Ember Mesh	**14 Mesh - 304 Stainless Steel**